REX150

EXCAVATOR

RHINO
EQUIPMENT

Unprecedented precision and ease of operation.

This Rhino excavator is loaded with enhancements that not only increase productivity and uptime, but lower daily operating costs, too. A high-efficiency "on-demand" cooling system, advanced multifunction monitor, and productivity modes to allow you to choose your digging style headline the long list of advances.

1. Level climate-control system with automotive-style adjustable louvers helps keep the glass clear and the cab comfortable.
2. LCD monitor provide intuitive access to a wealth of information and functions.
3. Ergonomically correct short-throw pilot levers provide smooth, predictable fingertip control with less movement or effort.

ENGINE	
Engine Make / Engine Model	Kubota V3800
Emissions (optional)	EPA 4 - EURO 5
Cylinders	4
Displacement L (cu. In)	3.77(229.9)
Net Power kW (Hp) @2,200 rpm	95(127.4)
Fuel System	Direct Injection
Aspiration	Turbocharged
COOLING	
Fan Drive	Belt Driven
POWERTRAIN	
Type	Dual speed mode for tracks on-dash one-button activation
Max. Travel Speeds	
Low	3(1.86)
High	5(3.11)
Drawbar Pull kg (lb)	11,000(24.251)
Gradeability	70 %
ELECTRICAL	
Number of Batteries	2
Voltage	24 volts
Alternator Rating (optional)	70A(120A)
Lights	5 Front lights, 1 Rear light
HYDRAULICS	
Type	Open center, load sensing, two variable-displacement axial piston pumps
Pump Brand	Korean PNM Brand
Valve Brand	Parker HF Brand
Swing Motor	Korean PNM or Rhino HP276
Drive Motor	Rhino Brand
Control	Pilot levers, low-effort hydraulic controls with horn and boost buttons
Control Type	Hydraulic Pilot Servo Operation System
Pressure Mpa (psi)	34,3(4.974)

Equipment specifications and images may change without notice from Rhino Equipment Group Inc.

Max. Flow L/min (gpm) (each pump)			~180(~47.5)
Power Boost Mpa (psi)			37(5.366)
Hydraulic Tank L (gal)			~130(~34.3)
Hydraulic System Total L (gal)			~160(~42.3)
Broken Pipeline System			Yes - Standard
CYLINDERS	Bore	Rod Diameter	Stroke
Boom mm (in)	110(4.33)	75(2.95)	1,050(41.3)
Arm mm (in)	120(4.72)	80(3.15)	1,280(50.4)
Bucket mm (in)	100(3.94)	70(2.76)	960(37.8)
UNDERCARRIAGE			
Carrier Rollers (each side)			2
Track Rollers (each side)			7
Shoes (each side) Triple Semi-Grousers			42
Shoe Type			Triple Semi-Grousers
Track Width mm (in)			500(19.7)
Track Adjustment			Hydraulic
Guides			Front Idler
Chain			Sealed and lubricated
Ground Pressure kpa (psi)			38(5.5)
Length of Track on Ground mm (ft)			2,900(9.6)
Undercarriage Length mm (ft)			3,700(12ft-2in)
Track Gauge mm (ft)			2,080(6.10)
Overall Width with 500mm shoes mm (ft)			2,580(8.6)
SWING MECHANISM			
Speed rpm			12.6
Torque Nm (lb-ft)			31,000(22.862)
Motor			Korean PNM or Rhino HP276
Mechanism Oil L(gal)			0,5(0.13)

Equipment specifications and images may change without notice from Rhino Equipment Group Inc.

OPERATING WEIGHTS

With full fuel tank, 79kg (175lb) operator, 0,17m3 (0.22cu.Yd) general purpose bucket, 350mm (13.8in) tracks and 1,450mm (4.8ft) arm

Base Weight kg (lb)	15,000(33.069)
Undercarriage kg (lb)	5,800(12.787)
One-Piece Boom kg (lb)	1,200(2.646)
Arm with Bucket Cyl & Linkage kg (lb)	620(1.367)
Boom Lift Cylinders (x2) kg (lb)	220(485)
Bucket 0.6 m³ kg (lb)	420(926)
Bucket 0.78 m³ kg (lb)	480(1.058)
Counterweight kg (lb)	2,800(6.173)

REFILL CAPACITIES L (gal)

Fuel Tank	270(71.3)
Cooling System	16(4.2)
Engine Oil	13(3.4)
Hydraulic System	160(42.3)
Hydraulic Tank	130(34.3)
Swing Drive	0,5(0.13)
Final Drive Case (each)	3,0(0.79)

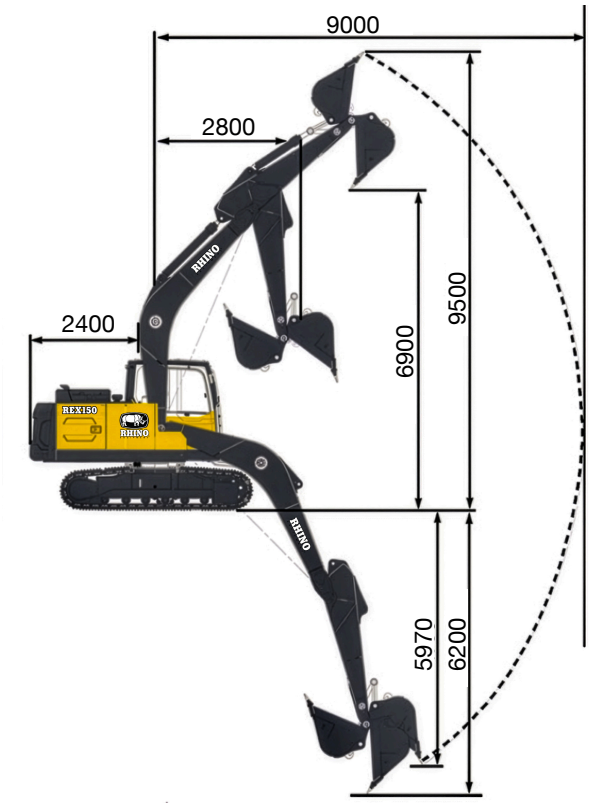

Equipment specifications and images may change without notice from Rhino Equipment Group Inc.

OPERATING DIMENSIONS	
Arm Length mm (ft)	2,700(8.10)
Boom Length mm (ft)	5,000(16.5)
Arm Digging Force kN (lb-f)	90(20.232)
Bucket Digging Force kN (lb-f)	115(25.852)
Lift Over End at 15' Radius, Ground Level kg (lb)	6,200(13.669)
Lift Over End at 20' Radius, Ground Level kg (lb)	4,300(9.480)
Lift Over Side at 15' Radius, Ground Level kg (lb)	4,300(9.480)
Lift Over Side at 20' Radius, Ground Level kg (lb)	3,000(6.614)
A. Max. Reach mm (ft)	9,200(30.2)
A'. Max. Reach at Ground Level mm (ft)	9,000(29.6)
B. Max. Digging Depth mm (ft)	6,200(20.4)
B' Max. Digging Depth at 2,500mm Falt Bottom mm (ft)	5,970(19.7)
C. Max. Cutting Height mm (ft)	9,500(31.2)
D. Max. Dumping Height mm (ft)	6,900(22.6)
E. Max Vertical Wall mm (ft)	5,500(18.1)
F. Tail Swing Radius mm (ft)	2,400(7.10)
Min. Swing Radius mm (ft)	2,800(9.2)

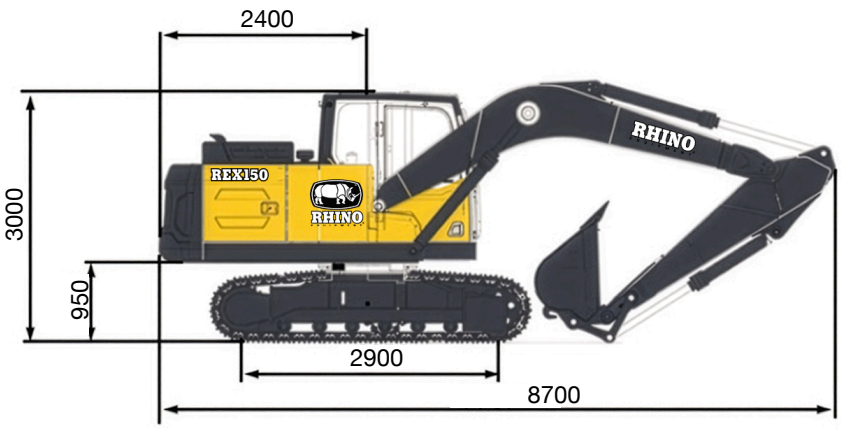

Equipment specifications and images may change without notice from Rhino Equipment Group Inc.

MACHINE DIMENSIONS	
A. Overall Length (Transport) mm (ft)	8,700(28.7)
B. Overall Height to Top of Boom mm (ft)	3,050(10)
B' Overall Height to Top of Cab	3,000(9.10)
C. Swing Radius mm (ft)	2,800(9.2)
D. Length of Track on Ground mm (ft)	2,900(9.6)
E. Undercarriage Length mm (ft)	3,700(12.2)
F. Counterweight Ground Clearance mm (ft)	950(3.1)
G. Upper-structure Width mm (ft)	2,600(8.6)
H. Cab Height mm (ft)	1,950(6.5)
I. Track Width mm (in)	500(19.7)
J. Gauge Width mm (ft)	2,080(6.10)
K. Overall Width with Triple Semi-Grouser 500mm shoes mm (ft)	2,580(8.6)
Min. Ground Clearance mm (in)	450(17.7)
Counterweigth Height mm (ft)	2,050(6.9)
Distance Swing Center to Rear	2,400(7.10)
KEY COMPONENTS	
Cabin Type	Luxury Full Seal Cabin with A/C
Control System	Hydraulic Pilot Servo Operation
Steel Track	500 mm wide
Broken Pipeline System	Yes — Standard
Attachments Line	Hydraulic line standard
STANDARD OPTIONS	
Engine Tiers	Tier 2, Tier 3, Tier 4
Track Width Options	500 mm / 600 mm / 700 mm
Attachments	Hydraulic hammers, log splitters, augers, compactors, rippers
Rhino Hammer Match	714BE
Bucket Options	General Purpose, Rock, Trench, Ditch Cleaning, Grapple
Quick Coupler	Optional
Front Dozer Balde	Optional

Equipment specifications and images may change without notice from Rhino Equipment Group Inc.

OPTIONS

Rhino Excavators can come with different options like: Tier2, Tier3, Tier4 Engine, Close cab, Rock bucket, Trench bucket, Thumb cutters, and many more according to work requirements.

ATTACHMENTS

Rhino Excavators come standard with the hydraulic line for attachments.

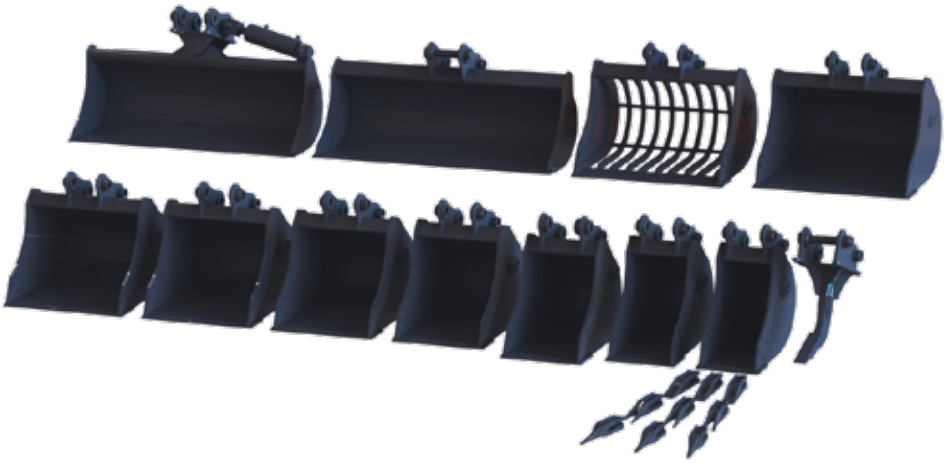

Many options buckets

Hydraulic hammers

Trenchers

Augers

and many more...

Equipment specifications and images may change without notice from Rhino Equipment Group Inc.

STANDARD BUCKETS	
General Purpose 0.6 m^3 (cu. Yd)	0,6(0.78)
General Purpose 0.8 m^3 (cu. Yd)	0,8(1.05)
Rock Bucket m^3 (cu. Yd)	0,5(0.65)
Trench Bucket m^3 (cu. Yd)	0,4(0.52)
Ditch Cleaning m^3 (cu. Yd)	1,0(1.31)
ATTACHMENTS	
Hydraulic Hammer	714BE
Thumb Cutte	Optional
Auger	Optional
Compactor	Optional
Ripper	Optional
Grapple	Optional
Quick Coupler	Optional
Front Dozer Blade	Optional

Equipment specifications and images may change without notice from Rhino Equipment Group Inc.